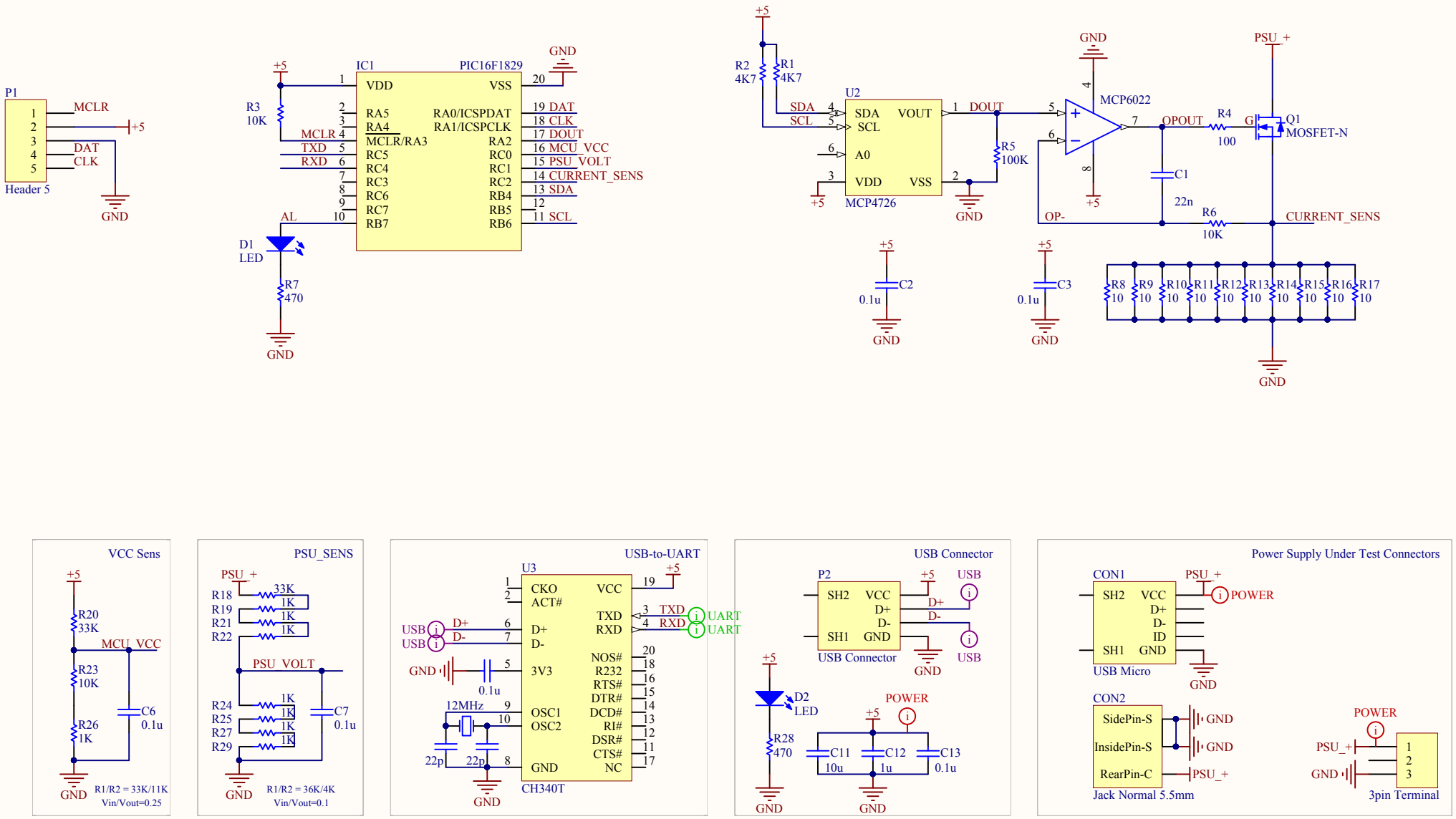
P1
MCLR
DAT
CLK
Header 5
GND
+5
IC1
PIC16F1829
VDD
VSS
RA5
RA4
MCLR/RA3
RC5
RC4
RC3
RC6
RC7
RB7
RA0/ICSPDAT
RA1/ICSPCLK
RA2
RC0
RC1
RC2
RB4
RB5
RB6
19 DAT
18 CLK
17 DOUT
16 MCU_VCC
15 PSU_VOLT
14 CURRENT_SENS
13 SDA
11 SCL
R3
10K
TXD
RXD
AL
D1
LED
R7
470
R2
4K7
R1
4K7
U2
SDA
SCL
A0
VDD
VSS
VOUT
DOUT
MCP4726
R5
100K
MCP6022
OPOUT
OP-
R4
100
Q1
MOSFET-N
C1
22n
R6
10K
PSU_+
CURRENT_SENS
C2
0.1u
C3
0.1u
R8
R9
R10
R11
R12
R13
R14
R15
R16
R17
10
VCC Sens
R20
33K
MCU_VCC
R23
10K
R26
1K
C6
0.1u
R1/R2 = 33K/11K
Vin/Vout=0.25
PSU_SENS
R18
R19
R21
R22
R24
R25
R27
R29
1K
PSU_VOLT
C7
0.1u
R1/R2 = 36K/4K
Vin/Vout=0.1
USB-to-UART
U3
CKO
ACT#
D+
D-
3V3
OSC1
OSC2
GND
VCC
TXD
RXD
NOS#
R232
RTS#
DTR#
DCD#
RI#
DSR#
CTS#
NC
CH340T
USB
UART
12MHz
22p
0.1u
USB Connector
P2
SH2
SH1
USB Connector
D2
LED
R28
470
POWER
C11
10u
C12
1u
C13
0.1u
Power Supply Under Test Connectors
CON1
USB Micro
CON2
SidePin-S
InsidePin-S
RearPin-C
Jack Normal 5.5mm
3pin Terminal