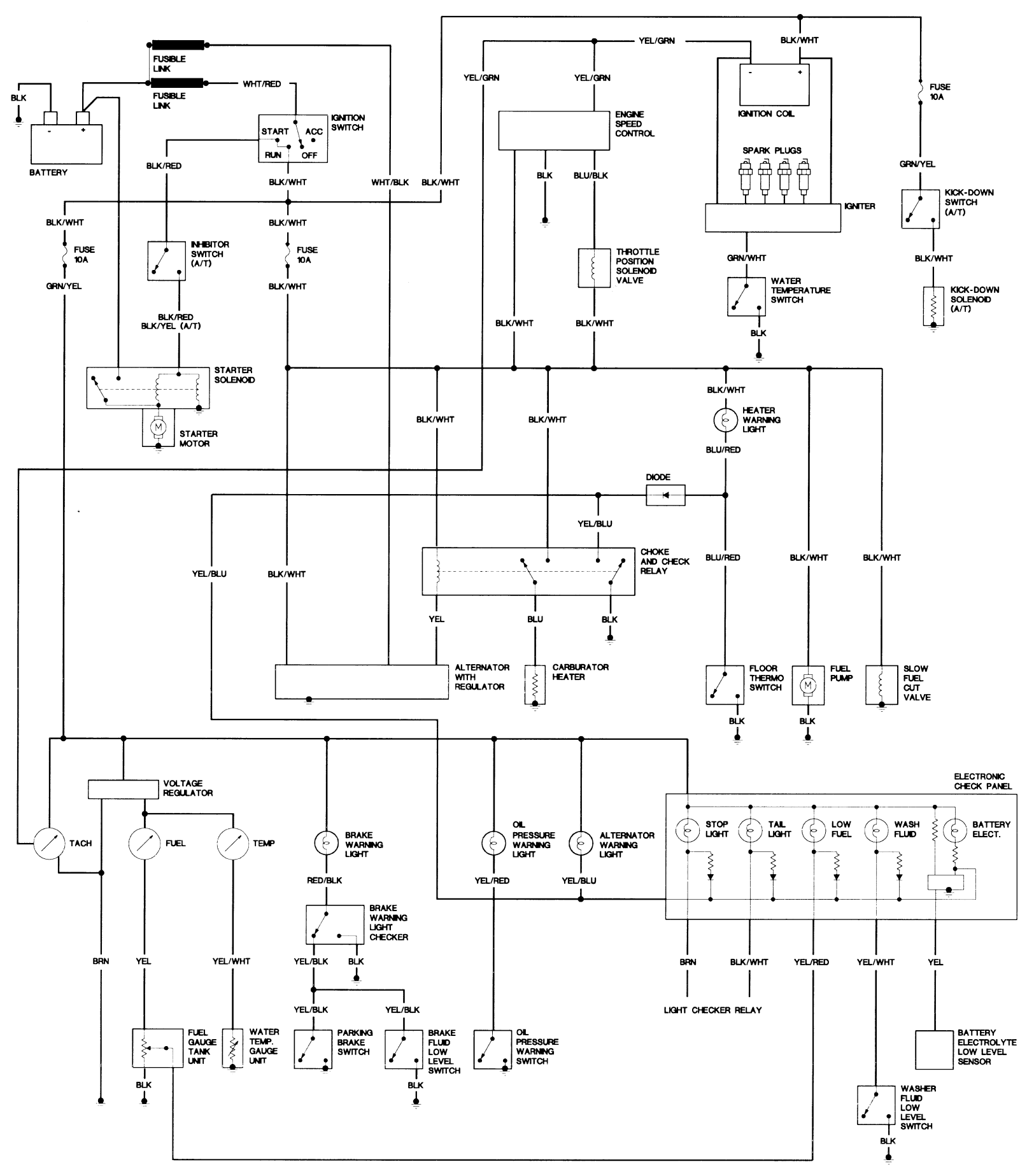
FUSIBLE LINK
FUSIBLE LINK
WHT/RED
BLK
BATTERY
IGNITION SWITCH
START
ACC
RUN
OFF
BLK/RED
BLK/WHT
WHT/BLK
BLK/WHT
YEL/GRN
YEL/GRN
YEL/GRN
ENGINE SPEED CONTROL
BLK
BLU/BLK
IGNITION COIL
SPARK PLUGS
IGNITER
BLK/WHT
FUSE 10A
GRN/YEL
KICK-DOWN SWITCH (A/T)
BLK/WHT
KICK-DOWN SOLENOID (A/T)
BLK/WHT
FUSE 10A
GRN/YEL
INHIBITOR SWITCH (A/T)
BLK/WHT
FUSE 10A
BLK/WHT
BLK/RED
BLK/YEL (A/T)
THROTTLE POSITION SOLENOID VALVE
BLK/WHT
BLK/WHT
GRN/WHT
WATER TEMPERATURE SWITCH
BLK
STARTER SOLENOID
STARTER MOTOR
BLK/WHT
BLK/WHT
BLK/WHT
HEATER WARNING LIGHT
BLU/RED
DIODE
YEL/BLU
CHOKE AND CHECK RELAY
YEL/BLU
BLK/WHT
BLU/RED
BLK/WHT
BLK/WHT
YEL
BLU
BLK
ALTERNATOR WITH REGULATOR
CARBURATOR HEATER
FLOOR THERMO SWITCH
FUEL PUMP
SLOW FUEL CUT VALVE
BLK
BLK
VOLTAGE REGULATOR
ELECTRONIC CHECK PANEL
TACH
FUEL
TEMP
BRAKE WARNING LIGHT
OIL PRESSURE WARNING LIGHT
ALTERNATOR WARNING LIGHT
STOP LIGHT
TAIL LIGHT
LOW FUEL
WASH FLUID
BATTERY ELECT.
RED/BLK
YEL/RED
YEL/BLU
BRAKE WARNING LIGHT CHECKER
BRN
YEL
YEL/WHT
YEL/BLK
BLK
BRN
BLK/WHT
YEL/RED
YEL/WHT
YEL
LIGHT CHECKER RELAY
YEL/BLK
YEL/BLK
FUEL GAUGE TANK UNIT
WATER TEMP. GAUGE UNIT
PARKING BRAKE SWITCH
BRAKE FLUID LOW LEVEL SWITCH
OIL PRESSURE WARNING SWITCH
BATTERY ELECTROLYTE LOW LEVEL SENSOR
BLK
BLK
WASHER FLUID LOW LEVEL SWITCH
BLK