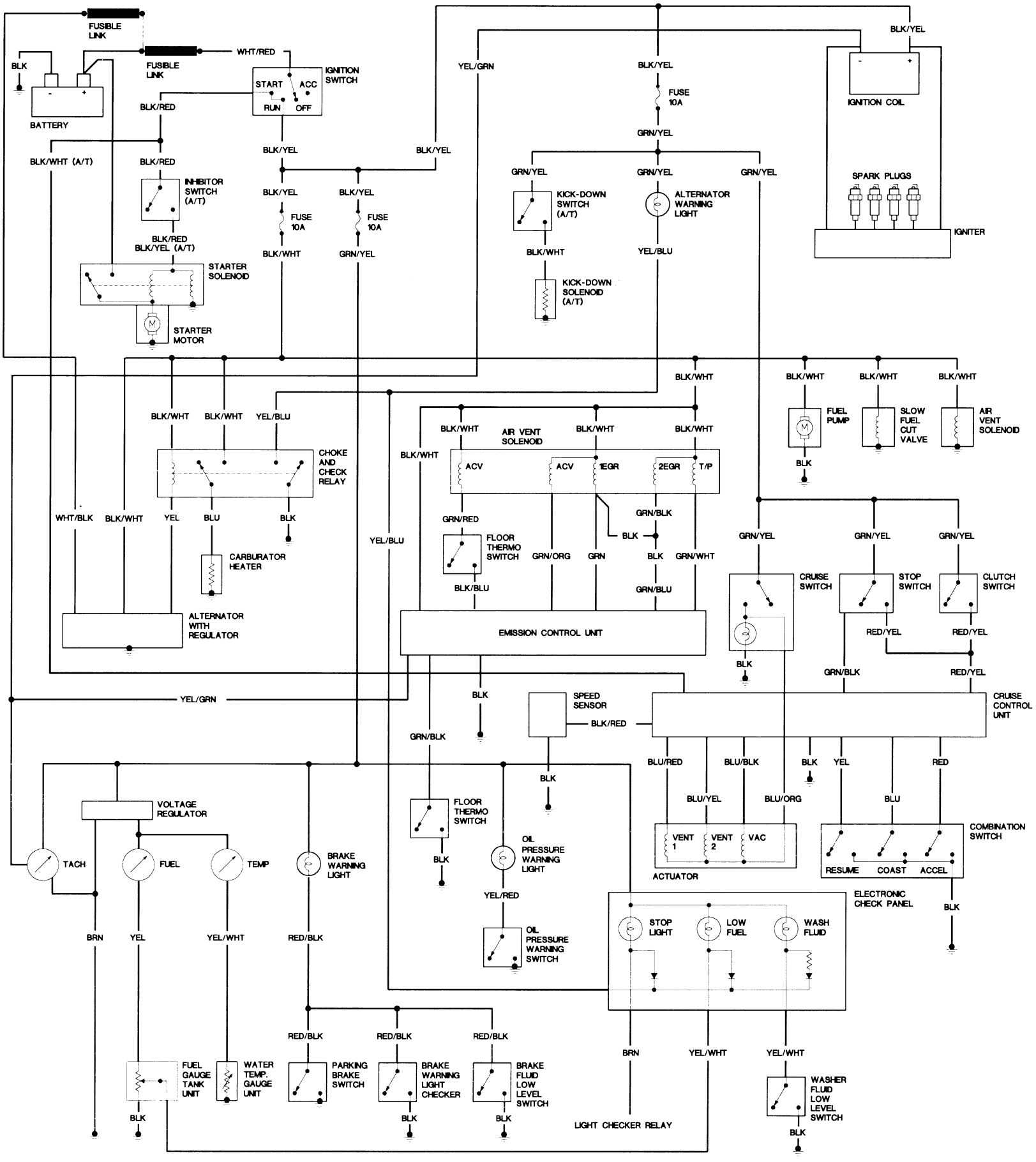
FUSIBLE LINK
FUSIBLE LINK
WHT/RED
BLK
BATTERY
IGNITION SWITCH
START
ACC
RUN
OFF
BLK/RED
BLK/WHT (A/T)
BLK/RED
INHIBITOR SWITCH (A/T)
BLK/RED
BLK/YEL (A/T)
STARTER SOLENOID
STARTER MOTOR
BLK/YEL
BLK/YEL
FUSE 10A
BLK/WHT
BLK/YEL
FUSE 10A
GRN/YEL
YEL/GRN
BLK/YEL
BLK/YEL
FUSE 10A
GRN/YEL
GRN/YEL
GRN/YEL
GRN/YEL
KICK-DOWN SWITCH (A/T)
ALTERNATOR WARNING LIGHT
BLK/WHT
YEL/BLU
KICK-DOWN SOLENOID (A/T)
BLK/YEL
IGNITION COIL
SPARK PLUGS
IGNITER
BLK/WHT
BLK/WHT
BLK/WHT
YEL/BLU
CHOKE AND CHECK RELAY
WHT/BLK
BLK/WHT
YEL
BLU
BLK
CARBURATOR HEATER
ALTERNATOR WITH REGULATOR
BLK/WHT
BLK/WHT
BLK/WHT
AIR VENT SOLENOID
BLK/WHT
ACV
ACV
1EGR
2EGR
T/P
GRN/RED
FLOOR THERMO SWITCH
BLK/BLU
GRN/ORG
GRN
GRN/BLK
BLK
BLK
GRN/WHT
GRN/BLU
YEL/BLU
EMISSION CONTROL UNIT
BLK/WHT
BLK/WHT
BLK/WHT
FUEL PUMP
BLK
SLOW FUEL CUT VALVE
AIR VENT SOLENOID
GRN/YEL
GRN/YEL
GRN/YEL
CRUISE SWITCH
BLK
STOP SWITCH
CLUTCH SWITCH
RED/YEL
RED/YEL
GRN/BLK
RED/YEL
YEL/GRN
BLK
SPEED SENSOR
BLK/RED
CRUISE CONTROL UNIT
GRN/BLK
BLU/RED
BLU/BLK
BLK
YEL
RED
BLU/YEL
BLU/ORG
BLU
VENT 1
VENT 2
VAC
ACTUATOR
COMBINATION SWITCH
RESUME
COAST
ACCEL
BLK
VOLTAGE REGULATOR
TACH
FUEL
TEMP
BRAKE WARNING LIGHT
FLOOR THERMO SWITCH
BLK
BLK
OIL PRESSURE WARNING LIGHT
YEL/RED
OIL PRESSURE WARNING SWITCH
ELECTRONIC CHECK PANEL
STOP LIGHT
LOW FUEL
WASH FLUID
BRN
YEL
YEL/WHT
RED/BLK
RED/BLK
RED/BLK
RED/BLK
FUEL GAUGE TANK UNIT
WATER TEMP. GAUGE UNIT
PARKING BRAKE SWITCH
BRAKE WARNING LIGHT CHECKER
BRAKE FLUID LOW LEVEL SWITCH
BLK
BLK
BLK
BRN
YEL/WHT
YEL/WHT
LIGHT CHECKER RELAY
WASHER FLUID LOW LEVEL SWITCH
BLK