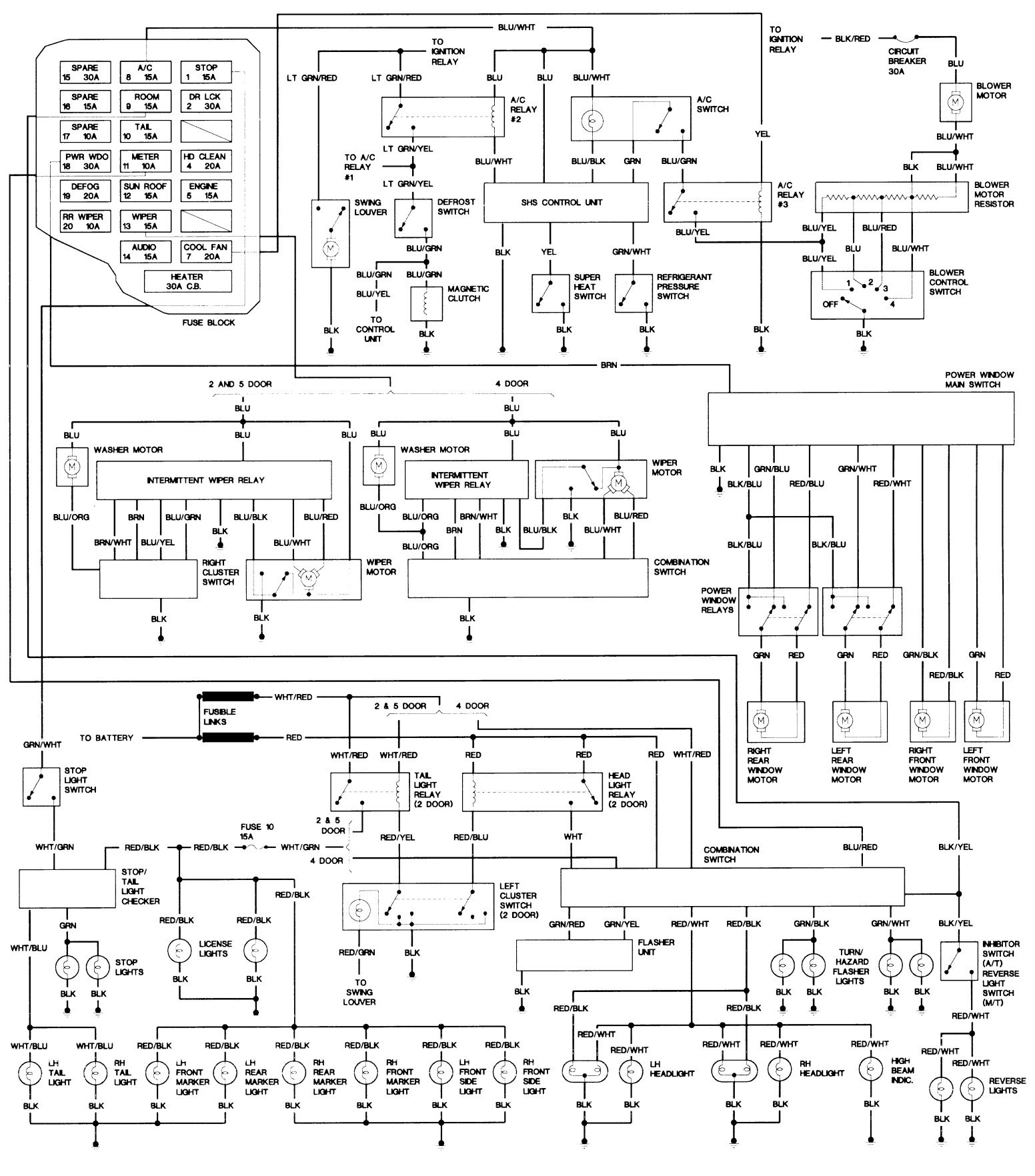
SPARE 15 30A
A/C 8 15A
STOP 1 15A
SPARE 16 15A
ROOM 9 15A
DR LCK 2 30A
SPARE 17 10A
TAIL 10 15A
PWR WDO 18 30A
METER 11 10A
HD CLEAN 4 20A
DEFOG 19 20A
SUN ROOF 12 15A
ENGINE 5 15A
RR WIPER 20 10A
WIPER 13 15A
AUDIO 14 15A
COOL FAN 7 20A
HEATER 30A C.B.
FUSE BLOCK
BLU/WHT
TO IGNITION RELAY
LT GRN/RED
LT GRN/RED
BLU
BLU
BLU/WHT
A/C RELAY #2
A/C SWITCH
LT GRN/YEL
TO A/C RELAY #1
LT GRN/YEL
BLU/WHT
BLU/BLK
GRN
BLU/GRN
SWING LOUVER
DEFROST SWITCH
SHS CONTROL UNIT
A/C RELAY #3
BLU/GRN
BLU/GRN
BLU/GRN
BLU/YEL
MAGNETIC CLUTCH
TO CONTROL UNIT
BLK
BLK
YEL
GRN/WHT
SUPER HEAT SWITCH
REFRIGERANT PRESSURE SWITCH
BLK
BLK
BLK
TO IGNITION RELAY
BLK/RED
CIRCUIT BREAKER 30A
BLU
BLOWER MOTOR
BLU/WHT
BLK
BLU/WHT
BLOWER MOTOR RESISTOR
YEL
BLU/YEL
BLU/YEL
BLU/RED
BLU
BLU/WHT
BLU/YEL
BLOWER CONTROL SWITCH
OFF
BLK
BRN
2 AND 5 DOOR
4 DOOR
BLU
BLU
BLU
BLU
BLU
BLU
BLU
BLU
WASHER MOTOR
INTERMITTENT WIPER RELAY
WASHER MOTOR
INTERMITTENT WIPER RELAY
WIPER MOTOR
BLU/ORG
BRN
BLU/GRN
BLU/BLK
BLU/RED
BLU/ORG
BLU/ORG
BRN/WHT
BRN
BLK
BLU/BLK
BLK
BLU/RED
BLU/WHT
BRN/WHT
BLU/YEL
BLU/WHT
BLU/ORG
RIGHT CLUSTER SWITCH
WIPER MOTOR
COMBINATION SWITCH
BLK
BLK
BLK
POWER WINDOW MAIN SWITCH
BLK
GRN/BLU
GRN/WHT
BLK/BLU
RED/BLU
RED/WHT
BLK/BLU
BLK/BLU
POWER WINDOW RELAYS
GRN
RED
GRN
RED
GRN/BLK
GRN
RED/BLK
RED
RIGHT REAR WINDOW MOTOR
LEFT REAR WINDOW MOTOR
RIGHT FRONT WINDOW MOTOR
LEFT FRONT WINDOW MOTOR
FUSIBLE LINKS
WHT/RED
TO BATTERY
RED
2 & 5 DOOR
4 DOOR
GRN/WHT
WHT/RED
WHT/RED
RED
RED
RED
WHT/RED
STOP LIGHT SWITCH
TAIL LIGHT RELAY (2 DOOR)
HEAD LIGHT RELAY (2 DOOR)
2 & 5 DOOR
FUSE 10 15A
WHT/GRN
RED/BLK
RED/BLK
WHT/GRN
4 DOOR
RED/YEL
RED/BLU
WHT
COMBINATION SWITCH
BLU/RED
BLK/YEL
STOP/ TAIL LIGHT CHECKER
RED/BLK
LEFT CLUSTER SWITCH (2 DOOR)
GRN
WHT/BLU
RED/BLK
RED/BLK
LICENSE LIGHTS
STOP LIGHTS
BLK
BLK
BLK
BLK
RED/GRN
BLK
TO SWING LOUVER
GRN/RED
GRN/YEL
RED/WHT
RED/BLK
GRN/BLK
GRN/WHT
BLK/YEL
FLASHER UNIT
BLK
TURN/ HAZARD FLASHER LIGHTS
BLK
BLK
BLK
BLK
INHIBITOR SWITCH (A/T) REVERSE LIGHT SWITCH (M/T)
RED/WHT
RED/BLK
RED/BLK
WHT/BLU
WHT/BLU
RED/BLK
RED/BLK
RED/BLK
RED/BLK
RED/BLK
RED/BLK
LH TAIL LIGHT
RH TAIL LIGHT
LH FRONT MARKER LIGHT
LH REAR MARKER LIGHT
RH REAR MARKER LIGHT
RH FRONT MARKER LIGHT
LH FRONT SIDE LIGHT
RH FRONT SIDE LIGHT
BLK
BLK
BLK
BLK
BLK
BLK
BLK
BLK
RED/WHT
RED/WHT
LH HEADLIGHT
RED/WHT
RED/WHT
RH HEADLIGHT
RED/WHT
HIGH BEAM INDIC.
BLK
BLK
BLK
BLK
BLK
RED/WHT
RED/WHT
RED/WHT
REVERSE LIGHTS
BLK
BLK