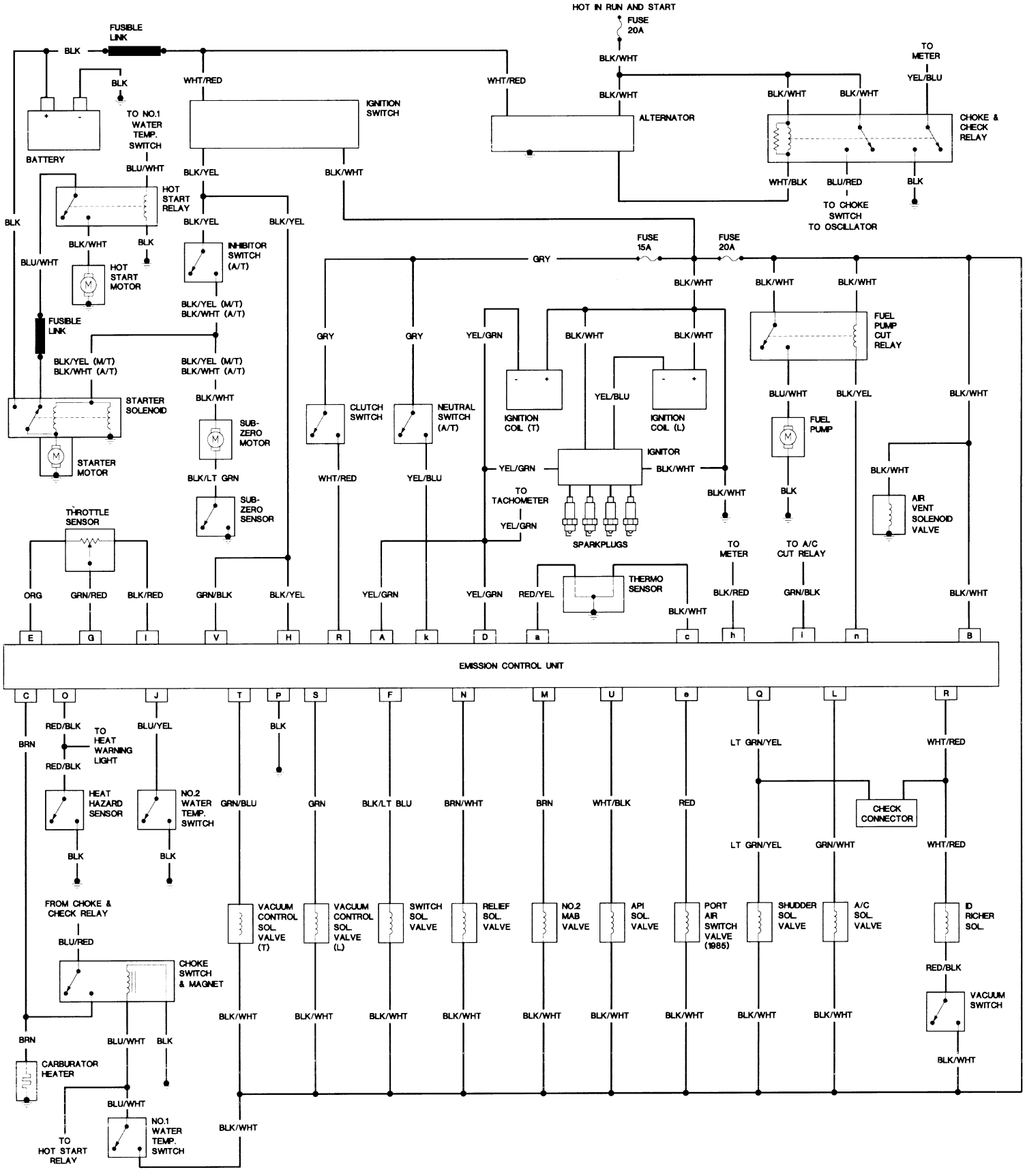
HOT IN RUN AND START
FUSE 20A
FUSIBLE LINK
BLK
BLK/WHT
TO METER
YEL/BLU
WHT/RED
BLK
BLK/WHT
BLK/WHT
BLK/WHT
IGNITION SWITCH
ALTERNATOR
CHOKE & CHECK RELAY
BATTERY
TO NO.1 WATER TEMP. SWITCH
BLU/WHT
BLK/YEL
BLK/WHT
WHT/BLK
BLU/RED
BLK
TO CHOKE SWITCH
TO OSCILLATOR
HOT START RELAY
BLK
BLK/YEL
BLK/YEL
BLK/WHT
BLK
INHIBITOR SWITCH (A/T)
BLU/WHT
HOT START MOTOR
FUSE 15A
FUSE 20A
GRY
BLK/WHT
BLK/WHT
BLK/WHT
BLK/YEL (M/T)
BLK/WHT (A/T)
FUSIBLE LINK
GRY
GRY
YEL/GRN
BLK/WHT
BLK/WHT
FUEL PUMP CUT RELAY
BLK/YEL (M/T)
BLK/WHT (A/T)
BLK/YEL (M/T)
BLK/WHT (A/T)
YEL/BLU
BLU/WHT
BLK/YEL
BLK/WHT
STARTER SOLENOID
CLUTCH SWITCH
NEUTRAL SWITCH (A/T)
IGNITION COIL (T)
IGNITION COIL (L)
FUEL PUMP
BLK/WHT
SUB-ZERO MOTOR
IGNITOR
STARTER MOTOR
YEL/GRN
BLK/WHT
BLK/WHT
BLK/WHT
BLK/LT GRN
WHT/RED
YEL/BLU
BLK
TO TACHOMETER
YEL/GRN
SUB-ZERO SENSOR
AIR VENT SOLENOID VALVE
THROTTLE SENSOR
SPARKPLUGS
TO METER
TO A/C CUT RELAY
THERMO SENSOR
ORG
GRN/RED
BLK/RED
GRN/BLK
BLK/YEL
YEL/GRN
YEL/GRN
RED/YEL
BLK/WHT
BLK/RED
GRN/BLK
BLK/WHT
E
G
I
V
H
R
A
k
D
a
c
h
i
n
B
EMISSION CONTROL UNIT
C
O
J
T
P
S
F
N
M
U
e
Q
L
R
BRN
RED/BLK
TO HEAT WARNING LIGHT
RED/BLK
BLU/YEL
BLK
LT GRN/YEL
WHT/RED
HEAT HAZARD SENSOR
NO.2 WATER TEMP. SWITCH
GRN/BLU
GRN
BLK/LT BLU
BRN/WHT
BRN
WHT/BLK
RED
CHECK CONNECTOR
BLK
BLK
LT GRN/YEL
GRN/WHT
WHT/RED
FROM CHOKE & CHECK RELAY
VACUUM CONTROL SOL. VALVE (T)
VACUUM CONTROL SOL. VALVE (L)
SWITCH SOL. VALVE
RELIEF SOL. VALVE
NO.2 MAB VALVE
API SOL. VALVE
PORT AIR SWITCH VALVE (1985)
SHUDDER SOL. VALVE
A/C SOL. VALVE
ID RICHER SOL.
BLU/RED
CHOKE SWITCH & MAGNET
RED/BLK
VACUUM SWITCH
BLK/WHT
BLK/WHT
BLK/WHT
BLK/WHT
BLK/WHT
BLK/WHT
BLK/WHT
BLK/WHT
BLK/WHT
BRN
BLU/WHT
BLK
CARBURATOR HEATER
BLU/WHT
TO HOT START RELAY
NO.1 WATER TEMP. SWITCH
BLK/WHT